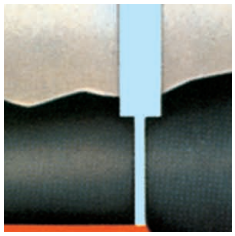

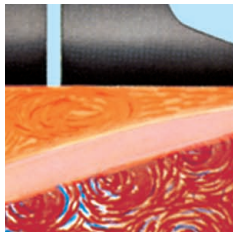

# KIEKENS VENTURI STYLE DESUPERHEATERS

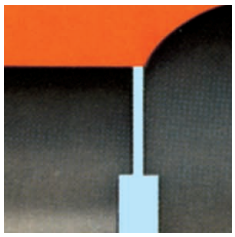
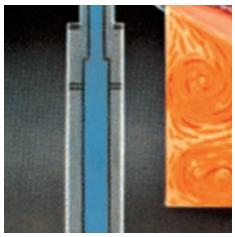
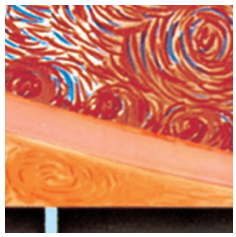
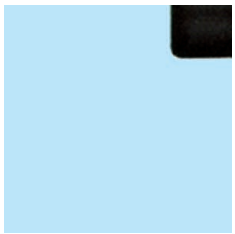
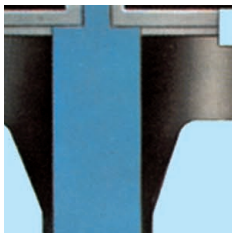
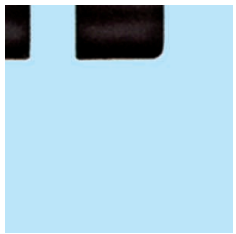

KIEKENS
DESUPERHEATERS

## Kiekens Desuperheaters

Specialized in designing and manufacturing steam and gas desuperheaters for chemical, petrochemical and power plants, KIEKENS ranks among the world's leading suppliers of this type of equipment. Since the late sixties, KIEKENS has built, installed and commissioned more than thousands of very varied units in more than 100 countries. With some success. Not one sin-gle claim has ever been made against the guarantees the company has given.

## Desuperheating

The most practical way to reduce the superheat value of steam is by the direct addition of water. To ensure temperature stability of the conditioned steam and to prevent thermal shock in downstream lines, the cooling water should ideally be fully atomized. There should also be a correct mix of superheated steam and cooling water.

## The Kiekens Venturi style desuperheater

In the KIEKENS venturi desuperheater, cooling water enters through a special streamlined spray nozzle. On the surface of this special spray nozzle a thin film of water will be created. The dynamic energy of the steam flow breaks the surface tension of the film, creating a conical shaped spray of atomized water. Ideal mixing is achieved by high steam flow turbulence, caused by the interaction of the venturi effect and the special shaped spray nozzle. Fast and total evaporation of the cooling water is now accomplished which means that rapid adjustments are possible, and also avoiding the need for any protective liners in downstream piping.

## Advantages

*Custom designing* - For any size, standard or range.

*Simple installation* - In any position. Short straight pipe runs. Limited control loops.

*Easy maintenance* - No moving parts, no pipe liners and no welding in the construction. Large spray apertures avoids the spary nozzle becoming choked.

*Energy saving* - No need for water supply pressure significantly higher than operational steam pressure and no need for atomizing steam.

*Large desuperheating range* - It is possible to handle extremely large differences in enthalpy between inlet an outlet steam flows.

## Construction

The body of a KIEKENS venturi desuperheater can be made of various kinds of forged steel. From carbon, light/ high alloyed and stainless steel to special materials. Spray nozzle and matching parts are made of stainless steel.

According to specific requirements, the KIEKENS venturi desuperheater can be installed into a piping systems with either flanged connections or welded joints. All structures are made according to ANSI, BS, DIN, JIS, or any other accepted international standards as specified by client.

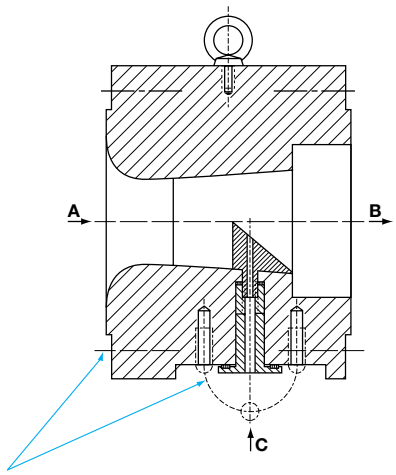


Pairs of tapped holes straddle the center lines with exception of the water inlet side. This prevents the holes from interconnecting each other.

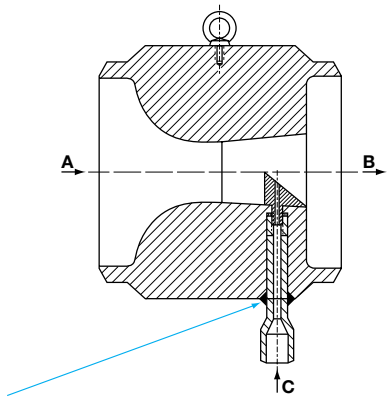


The socket joint has to be welded by the client for desuperheaters with welded joints.

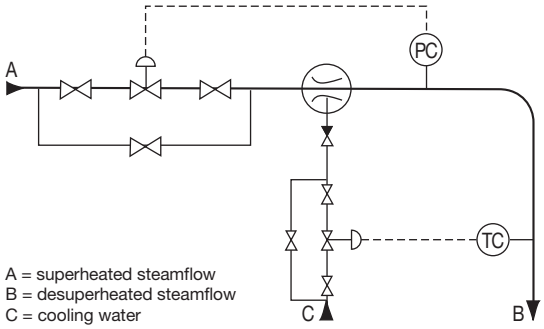


*Diagram of installation complete with bypass and block valves in the steam- and waterline.*

It is possible to install the KIEKENS venturi desuperheater in vertical, horizontal or diagonal pipe runs, to accommodate steam flowing either up or down. For correct operation only a relative short straight piperun is required, both upstream and downstream of the desuperheater. The required straight pipe lengths, which are mainly determined by the steam flow velocities and the relating cooling water quantities, are always specified by KIEKENS for each individual unit.

The orifice diameter is indicated by the type number. For example: Type 211 No. 75/150/250 gives the diameter of the orifice 75 mm, a nominal inlet of 150 mm and nominal outlet of 250 mm. The temperature-sensing element is generally installed after a downstream bend in the inner radius side. Or, if this is impracticable, as far away as possible from the water injection point.

## Steam flow range

The range of steam flow which can be accommodated by the KIEKENS venturi desuperheater depends on the available pressure drop. As previously explained, the cooling water spray is maintained by the dynamic energy of the steam flow. Accordingly, if the steam flow goes down from maximum to zero, at some point there will be insufficient dynamic energy to atomize the spray water. That dynamic energy is related to the pressure drop over the desuperheater. Research and experience have shown that the pressure drop over an KIEKENS venturi desuperheater has to be 0.05 bar minimum, in order to provide sufficient dynamic energy for proper atomizing of the spray water.

There is an approximate relationship between pressure drop and steam flow of

$$\sqrt{\frac{\triangle P\ max}{\triangle P\ min}} = \frac{\text{maximum steam flow}}{\text{minimum steam flow}}$$

Consequently, at an available maximum pressure drop of 0.5 bar, the steam flow range will be

$$\sqrt{\frac{0.5}{0.05}} \text{ or approximately 3:1.}$$

Therefore, in preparing requirements, extra attention must be paid to the steam flow range: especially in applications without pressure reduction. In applications with a limited pressure drop it is possible to install two desuperheaters in parallel.

The pressure-reducing valve and the KIEKENS venturi desuperheater need to be considered as one techni-cal unit in those cases where desuperheating is combined with pressure reduction.

In this kind of applications, part of the pressure drop occurs across the desuperheater. Since that calls for a pressure-reducing valve with a smaller pressure drop, noise problems are reduced.

The KIEKENS venturi desuperheater is capable to evaporate a large amount of water in relation to the steam flow. Therefore, the range in required water flow is seldom a problem. This capability makes the KIEKENS venturi exremely suitable for applications between coils in boiler installations and in cracking furnaces.

*Capacity*

The KIEKENS venturi desuperheater can be designed in any size and the maximum steam flow can vary from as little as 30 kg per hour to several hundreds of tons per hour.

All our technical proposals include those specifications showing the steam flow in relation to the pressure drop across the desuperheater and the necessary data required for engineering the applicable water-control valve and/or the applicable steam-control valve.

*Noise emission*

Experience has shown that noise emission from an KIEKENS venturi desuperheater generally depends on the piping layout and steam side pressure drop, therefore it is difficult to give general figures. However our desuperheater will usually add about 3 dB (A) to the sound pressure level of the surrounding pipe system.

*Hydraulic testing*

Since the product of volume and pressure of our desuperheaters is very small, international laws and industrial standards do not specify a hydraulic test, and most of our clients agree such a test is not necessary. The KIEKENS venturi design always results in very thick walls and there is no welding in the construction of the desuperheater itself.

*Gas desuperheating*

Although the engineering of a gas desuperheater is

more complicated, all previous statements made in this brochure about KIEKENS venturi steam desuperheaters also apply to our gas desuperheaters. In the past, many KIEKENS venturi desuperheaters have been successfully used for desuper- heating of gases: either with the use of their own condensate or with water as a cooling medium.

## Example of installation of two desuperheaters installed in parallel

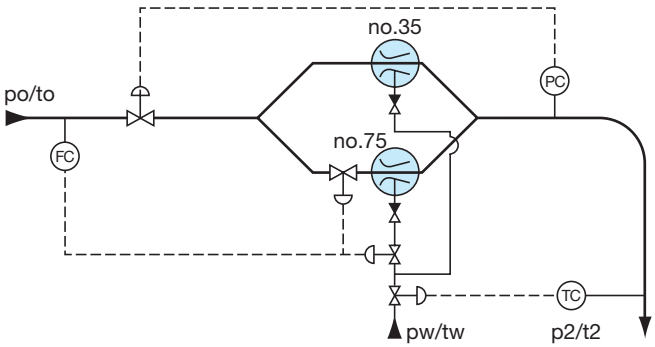


po abs. = 8 bar
to = 250° C.
p2 abs. = 4 bar
t2 = 147° C.
pw abs. = 5 bar
tw = 100° C.

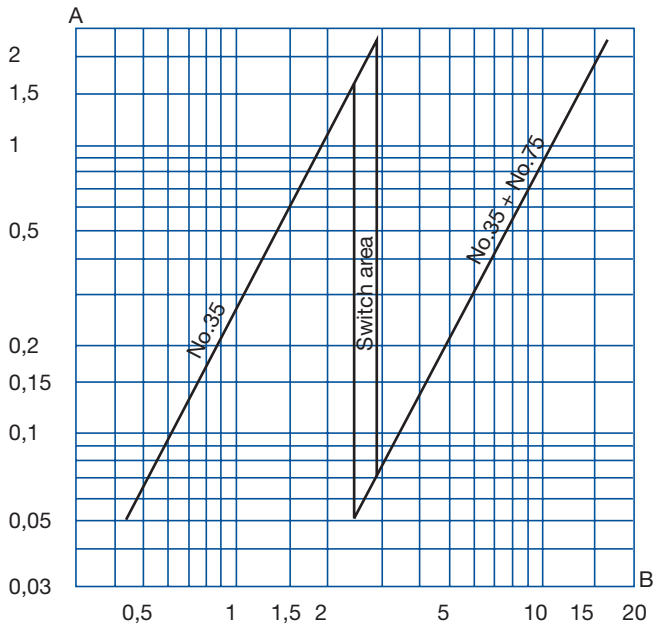


A = pressure drop desuperheater, bar
B = superheated steamflow, t/h

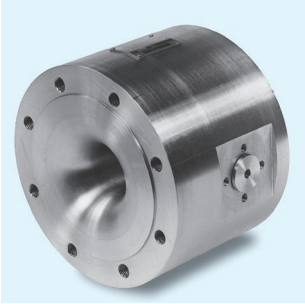

*Desuperheater with flanged connections seen from steam inletside and with horizontal waterinlet*

*Desuperheater with flanged connections seen from steam outlet-side,*

*Desuperheater with welded joints seen from the steam outletside and with horizontal waterinlet.*

*Desuperheater, with welded joints seen from the steam inletside and with the waterinlet from below.*

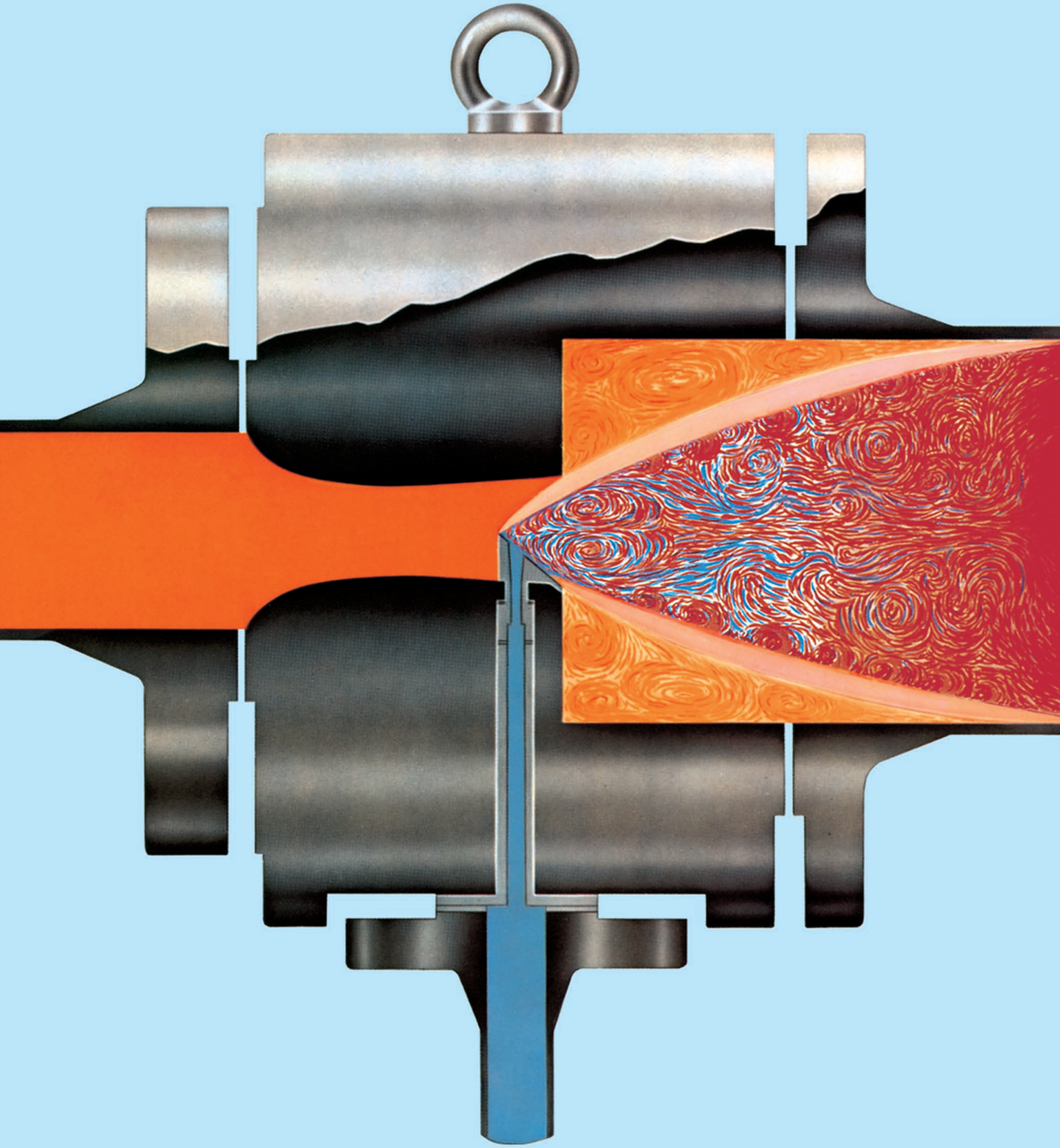

## Enquiry data

If you are interested in more detailed information about Kiekens desuperheaters, we would appreciate it if you send us the following data:

For both type of applications, kindly state maximum and minimum superheated or desuperheated steam quantities and, if known, specify the required connections.

**In case of pressure-reducing and desuperheating:**
CV value of existing steam control valve, if available. Pressure and temperature upstream of the steam control valve (po/to).
Pressure and temperature downstream of the desuperheater (p2/t2).
Pressure and temperature upstream of the water control valve (pw/tw).

**For desuperheating only:**
Pressure upstream or downstream of the desuperheater (p1 or p2). Temperature upstream and downstream of the desuperheater (t1/t2).
Maximum available pressure drop of the desuperheater (ΔP).
Pressure and temperature upstream of the water control valve (pw/tw).

For all the pressures, please, indicate whether they are absolute or gauge.

## With pressure reduction

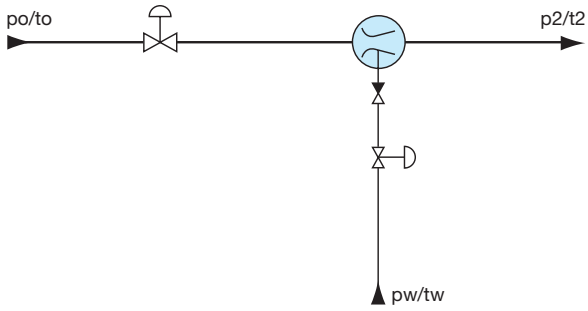


## Without pressure reduction

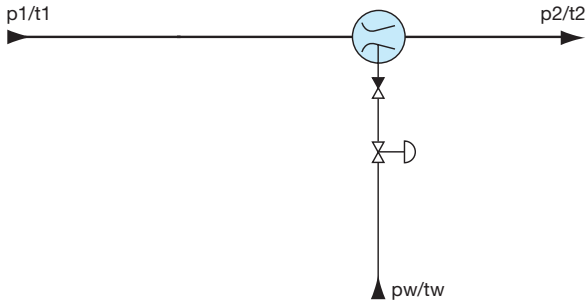


## Your enquiry should be forwarded to:

KIEKENS
DESUPERHEATERS

**Kiekens-DSH B.V.**
Grote Tocht 22, 1507 CG Zaandam - The Netherlands - Tel. +31752047340 info@kiekens-dsh.com