azbil

Specification

AT9000 Advanced Transmitter

Absolute Pressure Transmitters

OVERVIEW

AT9000 Advanced Transmitter is a microprocessor-based smart transmitter that features high performance and excellent stability. Capable of measuring gas, liquid, vapor, and liquid levels, it transmits 4 to 20 mA DC analog and digital signals according to the measured pressure.

It can also execute two-way communications between the communicator, thus facilitating self-diagnosis, range resetting, and automatic zero/span adjustment.

SFN, HART® and FOUNDATION Fieldbus are available.

* Refer to SS2-GTX00Z-0100 for FOUNDATION Fieldbus type for the items marked with [☆].

FEATURES

Excellent stability and high performance

- Our proven sensor technology enables Long-term stability.
- Unique characterization and composite semiconductor sensors realize excellent temperature and static pressure characteristics.

Wide measuring range (rangeability)

A wide measuring range is available from a single model. This feature is highly effective in taking measurements over a wide range and reducing the need for inventory.

* Model GTX60A: 35 to 3500 kPa abs. (range ability: 1 to100)

A diverse lineup

- A wide range of models is available to meet user needs for low, standard, and high pressures.
- A wide variety of corrosion-resistant materials for wetted parts is also available.

Remote communication

Two-way communication using digital output facilitates self-diagnosis, range resetting, automatic zero adjustment, and other operations.

China RoHS

This device is used in the Oil & Gas, Petrochemical, Chemical, Pulp & Paper, Food & Beverage, Machinery, Steel/Metal & Mining, and Automobile industries and therefore does not fall under the China RoHS Legislation.

If this device is used in semiconductor manufacturing equipment, labeling on the device and documents for the China RoHS may be required. If such documents are required, consult an Azbil Corp. representative.

HART® is a registered trademark of the FieldComm Group.
FOUNDATION™ is a registered trademark of the FieldComm Group.

PRODUCT APPROVALS [☆]

FM Explosionproof for Division System/ Flameproof for Zone System (Code F1)

Explosionproof for Class I, Division 1, Groups A, B, C and D; Class I, Zone 1, AEx d IIC
Dust-Ignitionproof for Class II, III, Division 1, Groups E, F and G
T5 −40 °C≤T_{amb}≤+85 °C
Hazardous locations
Indoor/Outdoor Type 4X, IP67
Factory sealed, conduit seal not required for Division applications
Caution - Use supply wires suitable for 5 °C above surrounding ambient

FM Intrinsic Safety (Code F2)

IS/I, II, III/1/ABCDEFG/T4; −40 °C≤T_{amb}≤+60 °C; 80395278, 80395279, 80395280; Entity; TYPE 4X; IP67
I/0/AEx ia/IIC/T4; −40 °C≤T_{amb}≤+60 °C; 80395278, 80395279, 80395280; Entity; TYPE 4X; IP67
Entity Parameters: Vmax (Ui)=30 Volts, Imax (Ii)=100 mA, Pi=1 W, Ci=10 nF, Li=0.5 mH

FM Nonincendive (Code F5)

NI/I/2/ABCD/T4; −40 °C≤T_{amb}≤+60 °C; 80395494; NIFW; TYPE 4X; IP67
NI/I/2/IIC/T4; −40 °C≤T_{amb}≤+60 °C; 80395494; NIFW; TYPE 4X; IP67
S/II, III/1/EFG/T4; −40 °C≤T_{amb}≤+60 °C; 80395494; NIFW; TYPE 4X; P67
Nonincendive Field Wiring Parameters:
Vmax (Ui)=30 Volts, Ci=10 nF, Li=0.5 mH

Combination of F1, F2 and F5 (Code F6)

ATEX Flameproof (Code A1)

CE 0344 Ex KEMA 08ATEX0004

II 1/2 G Ex d IIC T6 Tprocess=85 °C
−30 °C≤T_{amb}≤+75 °C IP66/67
II 1/2 G Ex d IIC T5 Tprocess=100 °C
−30 °C≤T_{amb}≤+80 °C IP66/67
II 1/2 G Ex d IIC T4 Tprocess=110 °C
−30 °C≤T_{amb}≤+80 °C IP66/67
II 2 D Ex tD A21 IP66/67 T85 Tprocess=85 °C
−30 °C≤T_{amb}≤+75 °C
II 2 D Ex tD A21 IP66/67 T100 Tprocess=100 °C
−30 °C≤T_{amb}≤+75 °C
II 2 D Ex tD A21 IP66/67 T110 Tprocess=110 °C
−30 °C≤T_{amb}≤+75 °C
Caution - Use supply wires suitable for 5 °C above surrounding ambient

ATEX Intrinsic Safety (Code A2)

CE 0344 Ex KEMA 07ATEX0200 X

II 1 G Ex ia IIC T4 Tprocess=105 °C
−30 °C≤T_{amb}≤+60 °C IP66/67
Electrical Parameters: Ui=30 V, Ii=93 mA, Pi=1 W, Ci=5 nF, Li=0.5 mH
II 1 D Ex iaD 20 IP66/67 T105 Tprocess=105 °C
−30 °C≤T_{amb}≤+60 °C

ATEX Type n (Code A5)

CE 0344 Ex KEMA 07ATEX0200 X

II 3 G Ex nL IIC T4 Tprocess=105 °C
−30 °C≤T_{amb}≤+60 °C IP66/67
Electrical Parameters: Ui=30 V, Ci=5 nF, Li=0.5 mH
II 2 D Ex tD A21 IP66/67 T85 Tprocess=85 °C
−30 °C≤T_{amb}≤+75 °C
II 2 D Ex tD A21 IP66/67 T100 Tprocess=100 °C
−30 °C≤T_{amb}≤+80 °C
II 2 D Ex tD A21 IP66/67 T110 Tprocess=110 °C
−30 °C≤T_{amb}≤+80 °C

NEPSI Flameproof (Code N1)

Ex d IIC T6 DIP A21 T_A 85 °C Tprocess=80 °C
−30 °C≤T_{amb}≤+75°C
Ex d IIC T5 DIP A21 T_A 100 °C Tprocess=95 °C
−30 °C≤T_{amb}≤+80 °C
Ex d IIC T4 DIP A21 T_A 115 °C Tprocess=110 °C
−30 °C≤T_{amb}≤+80 °C
ENCLOSURE TYPE IP66/67

NEPSI Intrinsic Safety (Code N2)

Ex ia IIC T4 Tprocess=105 °C
−30 °C≤T_{amb}≤+60 °C
Enclosure IP66/67
Electrical Parameters: Ui=30 V, Ii=100 mA, Pi=1 W, Ci=13 nF, Li=0.5 mH

NEPSI Type n (Code N5)

Ex nL IIC T4 Tprocess=110 °C
−30 °C≤T_{amb}≤+60 °C
Enclosure IP66/67
Electrical Parameters: Ui=30 V, Ii=100 mA, Pi=1 W, Ci=13 nF, Li=0.5 mH

IECEx Flameproof (Code E1)

Certificate No. IECEx KEM 08.0001
Ga/Gb Ex d IIC T6 Tprocess=85 °C
−30 °C≤T_{amb}≤+75 °C IP66/67
Ga/Gb Ex d IIC T5 Tprocess=100 °C
−30 °C≤T_{amb}≤+80 °C IP66/67
Ga/Gb Ex d IIC T4 Tprocess=110 °C
−30 °C≤T_{amb}≤+80 °C IP66/67
Ex tD A21 IP66/67 T85 Tprocess=85 °C
−30 °C≤T_{amb}≤+75 °C
Ex tD A21 IP66/67 T100 Tprocess=100 °C
−30 °C≤T_{amb}≤+75 °C
Ex tD A21 IP66/67 T110 Tprocess=110 °C
−30 °C≤T_{amb}≤+75 °C
Caution - Use supply wires suitable for 5 °C above surrounding ambient

IECEx Intrinsic Safety (Code E2)

IECEx KEM 07.0058X
Zone 0 Ex ia IIC T4 Tprocess=105 °C
−30 °C≤Tamb≤+60 °C IP66/67
Electrical Parameters: Ui=30 V, Ii=93 mA, Pi=1 W, Ci=5 nF, Li=0.5 mH
Ex iaD 20 IP66/67 T105 Tprocess=105 °C
−30 °C≤Tamb≤+60 °C

IECEx Type n (Code E5)

IECEx KEM 07.0058X
Ex nL IIC T4 Tprocess=105 °C
−30 °C≤Tamb≤+60 °C IP66/67
Electrical Parameters: Ui=30 V, Ci=5 nF, Li=0.5 mH
Ex tD A21 IP66/67 T85 Tprocess=85 °C
−30 °C≤Tamb≤+75 °C
Ex tD A21 IP66/67 T100 Tprocess=100 °C
−30 °C≤Tamb≤+80 °C
Ex tD A21 IP66/67 T110 Tprocess=110 °C
−30 °C≤Tamb≤+80 °C

KOSHA Flameproof (Code K1)

Ex d II C T6 Tprocess=85 °C
−30 °C≤Tamb≤+75 °C
Ex d II C T5 Tprocess=100 °C
−30 °C≤Tamb≤+80 °C
Ex d II C T4 Tprocess=110 °C
−30 °C≤Tamb≤+80 °C

EMC Conformity [☆]

EN 61326-1 (industrial electromagnetic environment)
EN 61326-2-3

FUNCTIONAL SPECIFICATIONS

Type of protection

NEMA 3 and 4X
IEC IP66/67

Measuring span/Setting range

Model	Measuring Span	Setting Range
GTX30A	4 to 104 kPa abs {30 to 780 mmHg abs}	0 to 104 kPa abs {0 to 780 mmHg abs}
GTX60A	35 to 3500 kPa abs {0.35 to 35 kgf/cm² abs}	0 to 3500 kPa abs {0 to 35 kgf/cm² abs}

Working Pressure Range/Overload Resistance value

Model	Working Pressure Range	Overload Resistance value
GTX30A	0.01 to 104 kPa abs {0.1 to 780 mmHg abs} See Figure 1	300 kPa abs {3.0 kgf/cm² abs}
GTX60A	0.01 to 3500 kPa abs {0.1 mmHg abs to 35 kgf/cm² abs} See Figure 1	5250 kPa abs {52.5 kgf/cm² abs}

Note) With PVC wetted parts, the maximum working pressure is 1.5 MPa {15 kgf/cm²}.

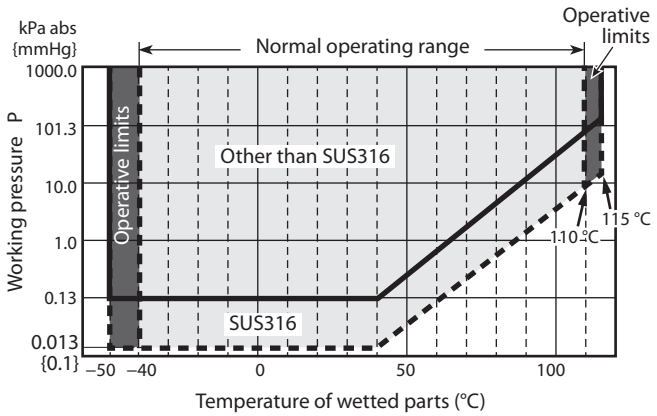

Figure 1. Working pressure and temperature of wetted parts section (for general purpose models)

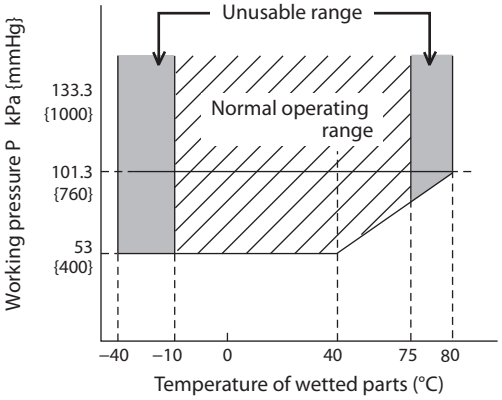

Figure 2. Working pressure and temperature of wetted parts section (for oxygen and chlorine service models)

Power Supply [☆]

12.5 to 42 V DC
Limited to 12.5 to 30 V DC for intrinsic safety, Type n, Non-incendive types

Power Supply voltage and load resistance characteristics [☆]

See Figure 3.
Limited to Load resistance: 250 to 1345 Ω for SFN or DE communication. 250 to 600 Ω for HART communication.
Power supply voltage: 12.5 to 30 V DC for intrinsic safety, Type n, Nonincendive types

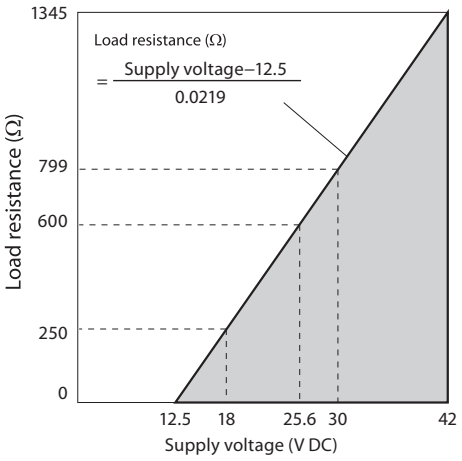

Figure 3. Supply voltage vs. load resistance characteristics

Note) For communication with a communicator, a load resistance of 250 Ω or more is necessary.

Output [☆]
Analog output (4 to 20 mA DC) with DE protocol
Analog output (4 to 20 mA DC) with HART protocol
Digital output (DE protocol)

Output signal [☆]
3.6 to 21.6 mA
3.8 to 20.5 mA (NAMUR NE43 compliant)

Failure Alarm [☆]
Upper: 21.6 mA or more
Lower: 3.6 mA or less

Ambient temperature limit
Normal operating range
−40 to +85 °C for general purpose models
−10 to +75 °C for oxygen and chlorine models
−25 to +80 °C for models with digital indicators

Operative limits
−50 to +93 °C for general purpose models
−40 to +80 °C for oxygen and chlorine models
−30 to +85 °C for models with digital indicators

Transportation and storage conditions
−50 to +85 °C

Temperature ranges of wetted parts
Normal operating range
−40 to +110 °C for general purpose models
−20 to +75 °C for oxygen and chlorine models

Operative limits
−50 to +115 °C for general purpose models
−40 to +80 °C for oxygen and chlorine models

Ambient humidity limits
5 to 100 % RH

Stability against supply voltage change
±0.005 % FS/V

Response time [☆]
Below 100 msec. (when damping time is set to 0 sec.)

Damping time [☆]
Selectable from 0 to 128 sec. (HART)
Selectable from 0 to 32 sec. in ten stages (SFN)

Zero Stability
± 0.2% of URL per 10-year

Lightning protection [☆]
Applicable Standards; IEC 61000-4-5
Peak value of current surge (80/20 μ sec.): 6000 A

Indicator
The digital LCD indicator (optional) indicates engineering units and can be set freely between −19999 and 19999 (4.5 digits). For meter calibration, specify the following items when placing your order

- Meter calibration range
- Meter calibration unit
- Linear/Square-root for meter indication.
  Various kinds of data can be set using the communicator.

OPTIONAL SPECIFICATIONS

Oil free finish
The transmitter is shipped with oil-free wetted parts.

Adapters for anticorrosion materials
These are adaptor flanges to connect 82 mm pipes made of anticorrosion materials [excluding ASTM B575 (Equivalent to Hastelloy C-276)] to 54 mm general-purpose pipes.

External zero/span adjustment function
The transmitter can be easily adjusted to zero or span in the field.
Indicator must be selected to enable this option.
Fieldbus type does not have span adjustment.

Elbow
This is an adaptor for changing the electrical conduit connection port from the horizontal to the vertical direction, if required by wiring conditions in the field. One or two elbows may be used as needed.

Conformance to Non SI units
We deliver transmitters set to any Non SI units as specified.

Safety Transmitter
Select this option to be used as a component of Safety Instrument System (SIS).
AT9000 is complied with IEC61508, certified according to Safety Integrity Level 2 (SIL-2)
This option is not applicable for FOUNDATION Fieldbus type, DE communication type, external zero/span adjustment (option A2), and Alarm output (option Q7).

Alarm Output (contact output)
Contact output is prepared as alarm output when alarm (Output Alarm/Sensor Temp. Alarm) condition is detected. It can be set to or Normally Close.
Contact output type : One open collector (NPN)
Contact rating: 30 V DC max., 30 mA DC max.
Residual voltage at output ON: 3.0 V max.
Operating mode: Normally Open (default)
Normally Close is not recommended.
When this option is selected, CHECK terminals for current check cannot be used.
This option is not applicable for FOUNDATION Fieldbus type, and with intrinsic safety, Type n, Nonincendive types.

Advanced diagnostics [☆]
This option is applicable for FOUNDATION Fieldbus type. Refer to SS2-GTX00Z-0100.

Custom calibration
Calibrate for the specified pressure range at the factory.

PHYSICAL SPECIFICATIONS

Materials

Fill fluid
Silicone oil for general purpose and high-temperature vacuum models
Fluorine oil for oxygen and chlorine models

Center body
316 SST

Transmitter case
Aluminum alloy, CF8M (Equivalent to 316 SST)

Meter body cover
SCS14A (equivalent to 316 SST) or PVC

Bolts and nuts (for fastening meter body cover)
Carbon steel (SNB7), 304 SST, 316 SST, 630 SST

O-ring
NBR

For Wetted parts

Adapter flange (option)
SCS14A (Equivalent to 316 SST), PVC

Center body
316 SST (Diaphragm 316L SST)
ASTM B574 (Hastelloy C-276 equivalent), Tantalum, 316L SST

Vents and plugs
316 SST, PVC

Gaskets
PTFE

Mounting Bracket

Bracket
Carbon steel, 304SST

U-bolt and nuts
304 SST

Paint
Standard: Baked acrylic paint
Corrosion-proof: Baked urethane paint

Color
Housing: azbil bordeaux 2.5R 2.25/5
Cap: Silver N-8.2

Weight
Approx. 3.4 kg

INSTALLATION

Electrical connection
1/2 NPT internal thread, M20 internal thread.

Grounding
Resistance 100 Ω max.

Mounting
Can be installed on a 2-inch horizontal or vertical pipe (can be directly mounted on a process pipe)

Process connection
Rc 1/2, 1/2 NPT internal thread and Rc 1/4, 1/4 NPT internal thread.

TRANSMITTER HANDLING NOTES
To get the most from the performance this transmitter can offer, please use it properly noting the points mentioned below. Before using it, please read the Instruction Manual.

Transmitter installation notes

⚠WARNING

- When installing the transmitter, ensure that gaskets do not protrude from connecting points into the process (such as adapter flange connection points and connecting pipes and flanges). Failure to do so may cause a leak of process fluid, resulting in harm from burns, etc. In addition, if the process fluid contains toxic substances, take safety measures such as wearing goggles and a mask to prevent contact with the skin and eyes and to prevent inhalation.
- Use the transmitter within the operating ranges stated in the specifications (for explosion-proofing, pressure rating, temperature, humidity, voltage, vibration, shock, mounting direction, atmosphere, etc.). Using the transmitter outside the operating conditions may cause device failure or fire, resulting in a harmful physical risk of burning or the like.
- When performing wiring work in explosion-proof areas, follow the work method specified in the explosion-proof guidelines.

⚠CAUTION

- After installation, do not use the transmitter as a foothold or put your weight on it. Doing so may cause damage.
- Be careful not to hit the glass indicator with tools etc. This could break the glass and cause injury.
- The transmitter is heavy. Wear safety shoes and take care when installing it.
- Impact to transmitter can damage sensor module.

Wiring notes

⚠WARNING

- To avoid shocks, do not perform electrical wiring work with wet hands or with live wires.

⚠CAUTION

- Do wiring work properly in conformance with the specifications. Wiring mistakes may result in malfunction or irreparable damage to the instrument.
- Use a power supply that conforms to the specifications. Use of an improper power supply may result in malfunction or irreparable damage to the instrument.
- Use a power supply with overcurrent protection for this instrument.

Handling precautions for HART specification devices

- If you need to operate with a secondary host (HART communicator, etc.), set the communication interval of the primary host (DCS, device management system) to 8 seconds or more, or suspend communication from the primary host. If the primary host repeats HART communication within 8 seconds, the request from the secondary host may not be received (communication may not be possible).
- If electrical noise in the environment prevents HART communications with the host, take countermeasures such as separating the signal cables from the source of the noise, improving the grounding, changing to shielded signal cables, etc. Even if noise interferes with HART communications, the 4–20 mA analog signal will be unaffected and can be used for control.
- If this product is being operated in multidrop mode, there is a limit to the number of devices that can be used. If you are using multidrop mode, please consult with us.

PERFORMANCE SPECIFICATIONS

Reference accuracy

Shown for each item are the percentage ratio for x (kPa), which is the greatest value of either the upper range value (URV)*1, the lower range value (LRV)*2 or the span.

Model GTX30A

Material of wetted parts: Diaphragm; 316L SST, Others; 316 SST

Reference accuracy *3 *4		±0.15 %	(For $x \geq 12$ kPa abs {90 mmHg abs})
		$\pm \left(0.05+0.1\times\frac{12}{x} \right)$ %	(For $x < 12$ kPa abs {90 mmHg abs})
Ambient Temperature effect (Shift from the set range) Change of 30 °C *3	Combined shift: (including zero and span shifts)	±1.2 %	(For $x \geq 12$ kPa abs {90 mmHg abs})
		$\pm \left(0.35+0.85\times\frac{12}{x} \right)$ %	(For $x < 12$ kPa abs {90 mmHg abs})

Model GTX30A

Material of wetted parts: Diaphragm; ASTM B574 (Hastelloy C-276 equivalent), Tantalum, 316L SST
Others; ASTM B574 (Hastelloy C-276 equivalent), Tantalum, 316L SST

Reference accuracy *3 *4		±0.35 %	(For $x \geq 12$ kPa abs {90 mmHg abs})
		$\pm \left(0.25+0.1\times\frac{12}{x} \right)$ %	(For $x < 12$ kPa abs {90 mmHg abs})
Ambient Temperature effect (Shift from the set range) Change of 30 °C *3 (Range from –5 to 55 °C)	Combined shift: (including zero and span shifts)	$\pm \left(0.55+1.85\times\frac{24}{x} \right)$ %	

Model GTX60A

Material of wetted parts: Diaphragm; 316L SST, Others; 316 SST

Reference accuracy *3 *4		±0.15 %	(For $x \geq 350$ kPa abs {3.5 kgf/cm² abs})
		$\pm \left(0.05+0.1\times\frac{350}{x} \right)$ %	(For $x < 350$ kPa abs {3.5 kgf/cm² abs})
Ambient Temperature effect (Shift from the set range) Change of 30 °C *3	Combined shift: (including zero and span shifts)	±1.2 %	(For $x \geq 350$ kPa abs {3.5 kgf/cm² abs})
		$\pm \left(0.35+0.85\times\frac{350}{x} \right)$ %	(For $x < 350$ kPa abs {3.5 kgf/cm² abs})

Model GTX60A

Material of wetted parts: Diaphragm; ASTM B575 (Hastelloy C-276 equivalent), Tantalum, 316L SST
Others; ASTM B575 (Hastelloy C-276 equivalent), Tantalum, 316L SST

Reference accuracy *3 *4		±0.35 %	(For $x \geq 350$ kPa abs {3.5 kgf/cm² abs})
		$\pm \left(0.25+0.1\times\frac{350}{x} \right)$ %	(For $x < 350$ kPa abs {3.5 kgf/cm² abs})
Ambient Temperature effect (Shift from the set range) Change of 30 °C *3 (Range from –5 to 55 °C)	Combined shift: (including zero and span shifts)	±1.5 %	(For $x \geq 350$ kPa abs {3.5 kgf/cm² abs})
		$\pm \left(0.35+1.15\times\frac{350}{x} \right)$ %	(For $x < 350$ kPa abs {3.5 kgf/cm² abs})

1. URV denotes the process value for 100 % (20 mA DC) output.

2. LRV denotes the process value for 0 % (4 mA DC) output.

3. Within a range of URV≥0 and LRV≥0.

4. Reference accuracy at calibrated condition.

MODEL SELECTION

Model GTX30A (Standard absolute pressure)
Model GTX60A (High absolute pressure)

Model No.: **GTX_ _A - Selection I (I II III IV V VI VII) - Selection II (I II III IV V VI)** - Option

Basic Model No.

	Measuring span	4.0 to 104 kPa abs. (30 to 780 mmHg)*1	GTX30A
		35 to 3500 kPa abs. (0.35 to 35 kgf/cm²)*2	GTX60G

Selection I

I	Output	4 to 20 mA (SFN Communication)			A	
		4 to 20 mA (HART Communication)			B	
		FOUNDATION Fieldbus communication			C	
		Digital output (DE communication) *3			D	
II	Fill fluid	Regular type (Silicone oil)				A
		For oxygen service (Fluorine oil)				H
		For chlorine service (Fluorine oil) *4				J
III	Material (Meterbody cover, Vent/Drain plugs)	Meterbody cover	Vent/Drain plugs			
		SCS14A	316 SST		A	
		PVC *5 *6 *7 *8	PVC *5 *6 *7 *8		C	
IV	Material (center body)	316 SST (Diaphragm: 316L SST)				A
		ASTM B575 (Equivalent to Hastelloy C-276)*9				B
		Tantalum *9 *10				C
		316L SST *10				D
V	Process connections	Rc 1/2, with adapter flange *7				A
		Rc 1/4, with adapter flange				B
		Rc 1/4, without adapter flange				C
		1/2 NPT internal thread, with adapter flange *7				D
		1/4 NPT internal thread, with adapter flange				E
		1/4 NPT internal thread, without adapter flange				F
VI	Process installation	Vertical piping, top connection *8 *9				A
		Vertical piping, bottom connection *8 *9				B
		Horizontal piping, front connection				C
VII	Bolt/nut	Carbon steel				A
		304 SST				B
		316 SST *11				D

**1. Specify range in abs. Pressure. Correct: 0 to 500 mmHg abs. Incorrect: −700 mmHg to 1 kgf/cm².*

**2. Specify range in abs. Pressure. Correct: 0 to 3 kgf/cm² abs. Incorrect: −1 to 2 kgf/cm² abs.*

**3. Not applicable for the combination with code A2 "With external Zero/Span adjustment", Q1 "Safety Transmitter", and Q2 "NAMUR NE43 Compliant Output signal limits" of Option.*

**4. In case code J is selected, code C "Tantalum" of Material (Centerbody) should be selected.*

**5. 304 SST bolts and nuts material (-B) must be selected when PVC meterbody cover is selected (-C).The max. working pressure is 1.5 MPa.*

**6. Applicable for wetted parts of center body material; ASTM B575 or Tantalum.*

**7. In case PVC is selected, code A, or D of Process connections should be selected.*

**8. In case PVC is selected, code A, or B of Process installation should be selected.*

**9. Code A, or B of Process installation should be selected.*

**10. Not applicable for the combination with code D of Bolt/nut.*

**11. In case this code is selected, code P8 of Option code should be selected.*

Model No.: **GTX_ _A** - Selection I (I II III IV V VI VII) - **Selection II (I II III IV V VI)** - Option

Selection II

								—
I	Electrical connection	1/2 NPT, Watertight						A
		M20, Watertight *12						B
II	Explosion proof [☆] *13	None					XX	
		FM Explosionproof for Division system/Flameproof for Zone system					F1	
		FM Intrinsic safety					F2	
		FM Nonincendive					F5	
		Combination of code F1, F2, and F5					F6	
		ATEX Flameproof					A1	
		ATEX Intrinsic safety					A2	
		ATEX Type n					A5	
		IECEx Flameproof					E1	
		IECEx Intrinsic safety					E2	
		IECEx Type n					E5	
		NEPSI Flameproof *14					N1	
		NEPSI Intrinsic safety *14					N2	
		NEPSI Type n *14					N5	
		KOSHA Flameproof *14					K1	
III	Indicator	None			X			
		With indicator *15			A			
IV	Paint *16	Standard				X		
		None (316 stainless steel housing)				E		
		Corrosion-proof (Urethane)				H		
V	Failure alarm	Upper limit of output at abnormal condition					A	
		Lower limit of output at abnormal condition					B	
		None (for FOUNDATION Fieldbus) *17					X	
VI	Mounting bracket	None						X
		CF8 (L form) *18						1
		CF8M (L form) *11						2
		Carbon steel (Flat form) *19						5
		304 SST (Flat form) *19						6

**12. Not applicable for the combination with code F1, F6 of Explosion proof.*

**13. For FOUNDATION Fieldbus type. Refer to SS2-GTX00Z-0100.*

**14. Not applicable for the combination with code E of Paint.*

**15. In case the code C "FOUNDATION Fieldbus communication" of output is selected, code A2 of Option code should be selected.*

**16. In case code X, H, or D is selected, the material of transmitter case is aluminum alloy.*

**17. Not applicable for the combination with code A "4 to 20 mA (SFN Communication)", B "4 to 20 mA (HART Communication)", and D "Digital output (DE communication)" of output.*

**18. Applicable for wetted parts of centerbody material, 316 SST.*

**19. Applicable for wetted parts of centerbody material, ASTM B575, Tantalum, 316L SST.*

Model No.: **GTX_ _A** - Selection I (I II III IV V VI VII) - Selection II (I II III IV V VI) - **Option**

Option —

	No options	XX
	With external Zero/Span adjustment (With external ZERO adjustment only for FOUNDATION Fieldbus)*8 *9	A2
	One elbow (left) *3 *4 *7	G1
	One elbow (right) *3 *4 *7	G2
	2 elbows *3 *5 *7	G3
	Long vent/drain plugs	G4
	Side vent/drain top *3	G6
	Side vent/drain bottom *3	G7
	Oil and water free finish	K1
	Oil free finish *1	K3
	Au Plating Diaphragm	L1
	316 SST (Parts in contact with atmosphere) *11 *12 *13	P8
	Safety Transmitter *2 *9 *14	Q1
	NAMUR NE43 Compliant Output Signal Limits: 3.8 to 20.5 mA (Output 21.6 mA/selected upper limit, 3.6 mA/selected lower limit) *9 *14	Q2
	Alarm Output (contact output) *10 *14	Q7
	Advanced diagnostics *15	Q8
	Custom calibration	R1
	Test report	T1
	Mill certificate	T2
	Traceability certificate	T4
	NACE certificate *6	T5
	Non SI Unit	W1

**1. No need to select when Fill Fluid code H, or J is selected.*

**2. Not applicable for the combination with code A2, or Q7 of Option.*

**3. Not applicable for the combination with code A, or B of Process installation.*

**4. Not applicable for the combination with code F1, F6 of Explosion proof.*

**5. Not applicable for any Explosion proof. Please select code XX "None" of Explosion proof.*

**6. Applicable for "ASTM B575", code B of Material (center body).*

**7. Not applicable for the combination with code B "M20, Watertight" electrical connection.*

**8. Not applicable for the combination with code X "None" of Indicator. Please select "With indicator".*

**9. Not applicable for the combination with code D "Digital output (DE communication)" of output.*

**10. Not applicable for the combination with code F2, F5, F6, N2, N5, E2, E5, A2 and A5 of Explosion proof.*

**11. In case code P8 is selected, code D of Bolt/nut should be selected.*

**12. In case code P8 is selected, code E of Paint should be selected.*

**13. In case code P8 is selected, code X or 2 of Mounting bracket should be selected.*

**14. Not applicable for the combination with code C "Digital output (FOUNDATION Fieldbus communication)" of output.*

**15. Not applicable for the combination with code A "4 to 20 mA (SFN Communication)", B "4 to 20 mA (HART Communication)", and D "Digital output (DE communication)" of output.*

DIMENSIONS

Model GTX30A/60A (Material (center body): 316 SST)

Process connection: Front side

Unit: mm

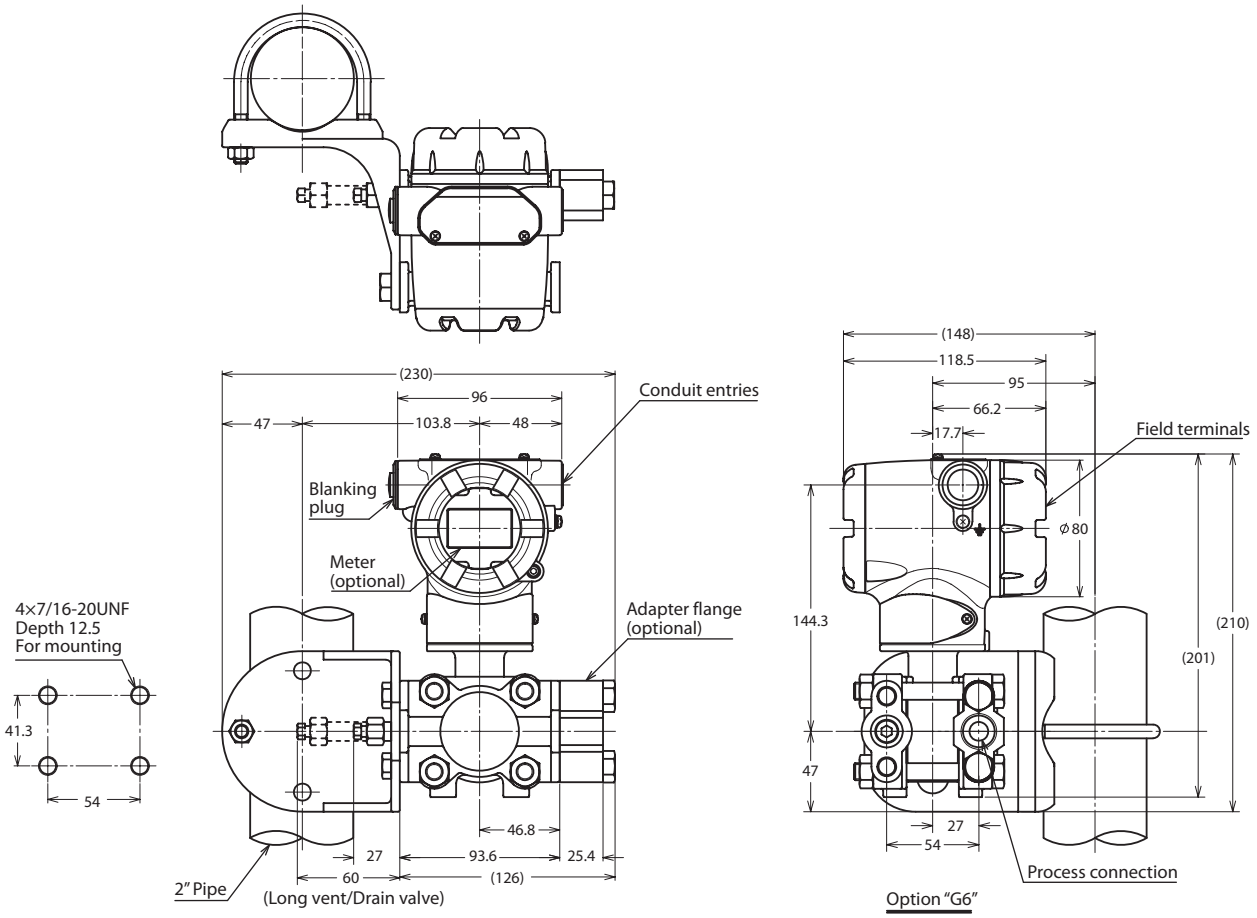

Process Connection: Top or bottom side

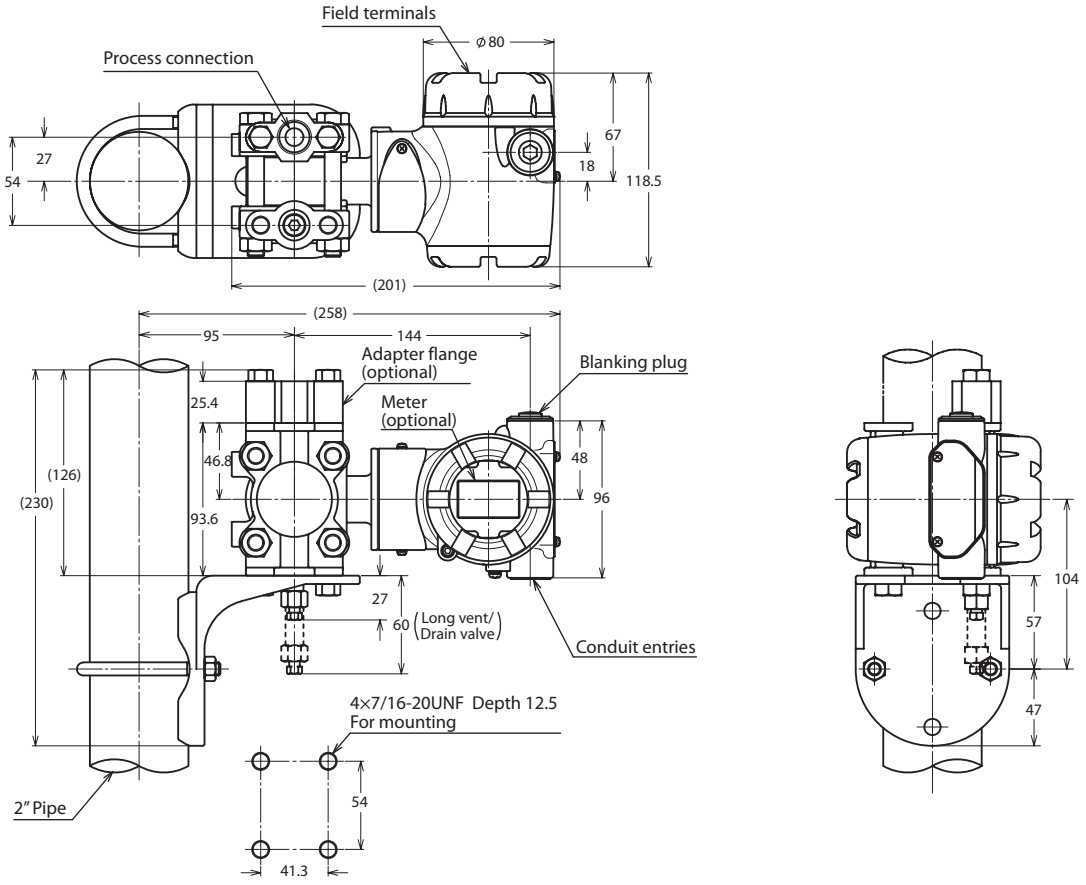

Model GTX30A/60A (Material (center body): ASTM B575, Tantalum, 316L SST)

Process connection: Top or bottom side

Unit: mm

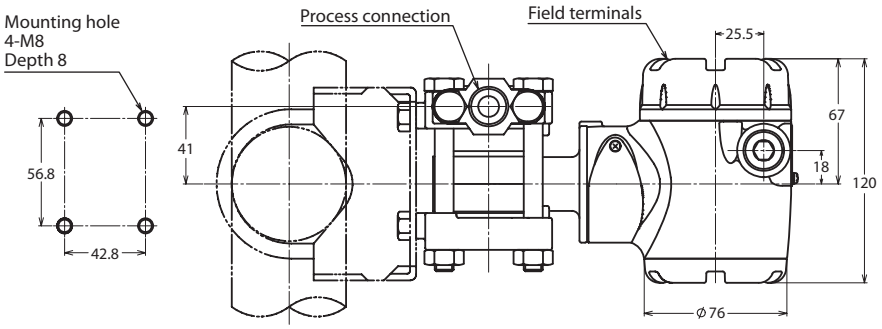

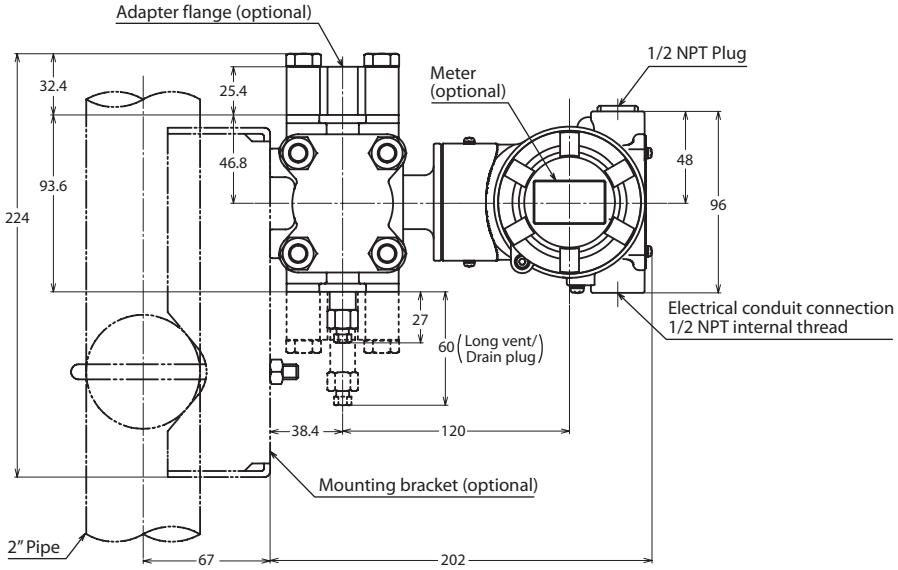

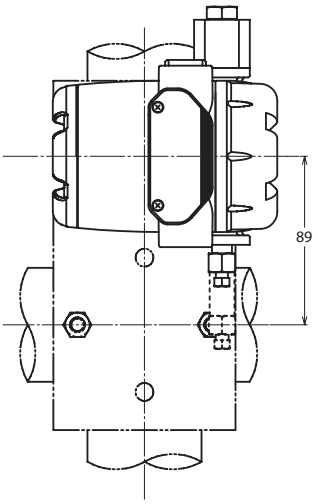

Model GTX30A/60A (Material (Meter body cover, Vent/Drain plugs: PVC))

Process connection: Top or bottom side

Unit: mm

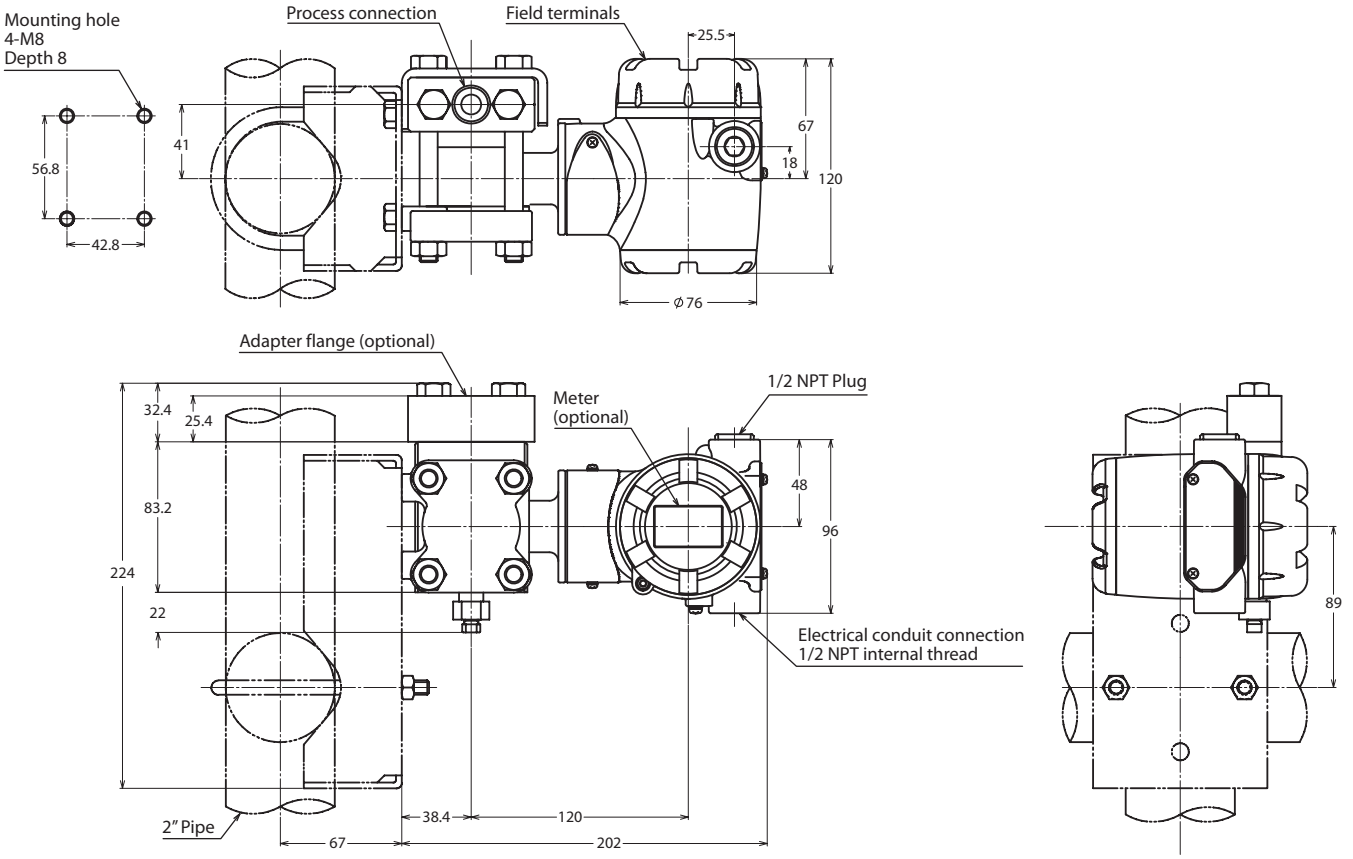

TERMINAL CONNECTION

(Not applicable for Fieldbus. See SS2-GTX00Z-0100 for Fieldbus.)

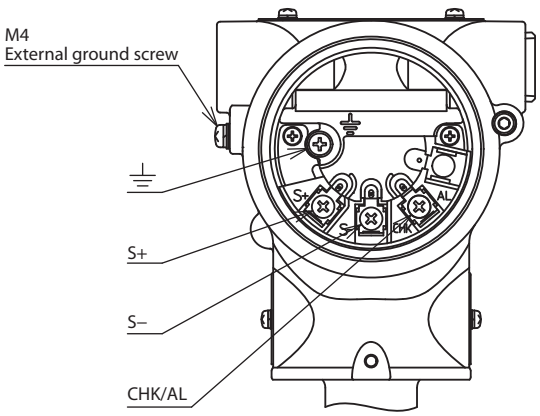

Table 1: Terminal connection

Symbol	Details
S+	Power supply and output signal +
S–	Power supply and output signal –/Check meter –
CHK/AL	Check meter +
⏚	Ground

Table 2: Terminal connection (option "07": Alarm output)

Symbol	Details
S+	Power supply and output signal +
S–	Power supply and output signal –
CHK/AL	Alarm +
⏚	Ground/Alarm –

Please, read 'Terms and Conditions' from following URL before the order and use.

http://www.azbil.com/products/bi/order.html

Specifications are subject to change without notice.

Azbil Corporation
Advanced Automation Company

1-12-2 Kawana, Fujisawa
Kanagawa 251-8522 Japan
URL: http://www.azbil.com/

1st edition: May 2008
17th edition: Mar. 2016

No part of this publication may be reproduced or duplicated without the prior written permission of Azbil Corporation.